File No.	File version	confidential

F7614 GPS+CDMA2000 1X EVDO IP MODEM TECHNICAL SPECIFICATION

General

F7614 GPS+CDMA2000 1X EVDO IP MODEM is a kind of cellular terminal device that provides data transfer and GPS function by public CDMA2000 1X EVDO network.

It adopts high-powered industrial 32 bits CPU and embedded real time operating system. It supports RS232 and RS485 (or RS422) port that can conveniently and transparently connect one device to a cellular network, allowing you to connect to your existing serial devices with only basic configuration. It has low power consumption states in which the power consumption could be 1ower than 1mA@12VDC. It has compatible digital I/O channel, ADC, input pulse counter and pulse wave output function.

It has been widely used on M2M fields, such as intelligent transportation, smart grid, industrial automation, telemetry, finance, POS, water supply, environment protection, post, weather, and so on.

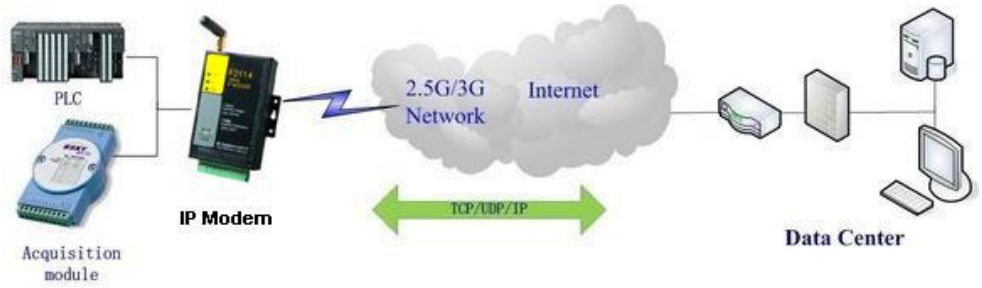

Product Feature ----------

Design for Industrial Application

- High-powered industrial cellular module
- High-powered industrial GPS module
- High-powered industrial 32 bits CPU
- Support low power consumption mode, including multi-sleep and trigger modes to reduce the power dissipation farthest
- Embedded Real Time Clock(RTC) circuit which can realize timing online/offline function
- Housing: iron, providing IP30 protection
- Power range: DC 5~35V

Stability and Reliability

- Support hardware and software WDT
- Support auto recovery mechanism, including online detect, auto redial when offline to make it always online
- RS232/RS485/RS422 ports:15KV ESD protection
- SIM/UIM port: 15KV ESD protection
- Power port: reverse-voltage and overvoltage protection
- Antenna port: lightning protection(optional)

Standard and Convenience

- Adopt terminal block interface, convenient for industrial application
- Support standard RS232/RS485/RS422 ports that can connect to serial devices directly

- TTL logic level RS232 interface can be customized
- Support intellectual mode, enter into communication state automatically when powered
- Provide management software for remote management
- Support several work modes
- Convenient configuration and maintenance interface

High-performance

- Support TCP server and support multi TCP client connection(optional)
- Support double data centers, one main and another backup
- Supply 5 I/O channels, compatible 2 pulse wave output channels, 2 analog inputs and one pulse input counters.
- Support multi data centers and it can support 5 data centers at the same time
- Support multi online trigger ways, including SMS, ring and data. Support link disconnection when timeout
- Support dynamic domain name(DDNS) and IP access to data center
- Design with standard TCP/IP protocol stack
- Support APN/VPDN

Product Specification

Cellular Specification

Item	Content
Cellular Module	Industrial cellular module
Standard and Band	CDMA2000 1X EVDO Rev A 800MHz,800/1900MHz(optional), 450MHz (optional) CDMA2000 1X RTT, IS-95 A/B
Bandwidth	Download speed:3.1Mbps, upload speed:1.8Mbps
TX power	<23dBm
RX sensitivity	<-104dBm

GPS Specification

Item	Content
GPS Module	Industrial GPS Module
Receiver Type	50 Channels GPS L1（1575.42MHz）C/A Code SBAS:WAAS，EGNOS，MSAS，GAGAN Compatible: GALILEO
Maximum Navigation Update Rate	4 Hz
Horizontal position accuracy	Autonomous：2.5m CPE SBAS：2.0m CPE
Time-To-First -Fix	Cold Start(Autonomous)：29S Warm Start(Autonomous)：29S Aided Starts：<1S

	Hot Starts(Autonomous)：<1S
Sensitivity	Tracking & Navigation：-160dBm Reacquisition：-160dBm Cold Start(Autonomous)：-144dBm
Timing Accuracy	RMS：30ns 99%：<60ns Granularity：21ns
Time Pulse Frequency	Configurable 0.25Hz to 1000Hz

Hardware System

Item	Content
CPU	Industrial 32 bits CPU
FLASH	512KB (Extendable)
SRAM	256KB(Extendable)

Interface Type

Item	Content
Serial	1 RS232 port and 1 RS485(orRS422) port, 15KV ESD protection Data bits: 5, 6 ,7, 8 Stop bits: 1, 1.5, 2 Parity: none, even, odd, space, mark Baud rate: 110~230400 bps
Indicator	"Power", "ACT", "Online", "GPS"
Antenna	Cellular: Standard SMA female interface, 50 ohm, lighting protection(optional) GPS: Standard SMA female interface, 50 ohm, lighting protection(optional)
SIM/UIM	Standard 3V/1.8V user card interface, 15KV ESD protection
Power	Terminal block interface, reverse-voltage and overvoltage protection

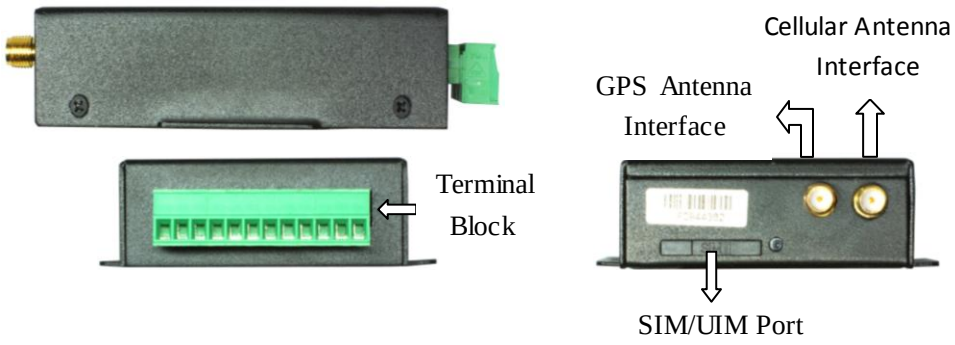

Power Input

Item	Content
Standard Power	DC 12V/0.5A
Power Range	DC 5~35V

Power Consumption

Working States	Power Consumption
Communication	50-85mA@12VDC；115-160mA@5VDC
Standby	25mA@12VDC；45mA@5VDC
Sleep	8mA@12VDC；18mA@5VDC
Timing Power Off	0.6mA@12VDC；1mA@5VDC

Physical Characteristics

Item	Content
Housing	Iron, providing IP30 protection
Dimensions	91x58.5x22 mm
Weight	210g

Environmental Limits

Item	Content
Operating Temperature	-25~+65℃ (-13~+149℉)
Extended Operating Temperature	-30~+75℃ (-22~+167℉)
Storage Temperature	-40~+85℃ (-40~+185℉)
Operating Humidity	95% (unfreezing)